RV1C 2.0 UPPER SADDLE COMPLETE V1.0

* ##-TO SPECIFY COLOR

SL-SILVER | CH-BLACK | AW-WHITE

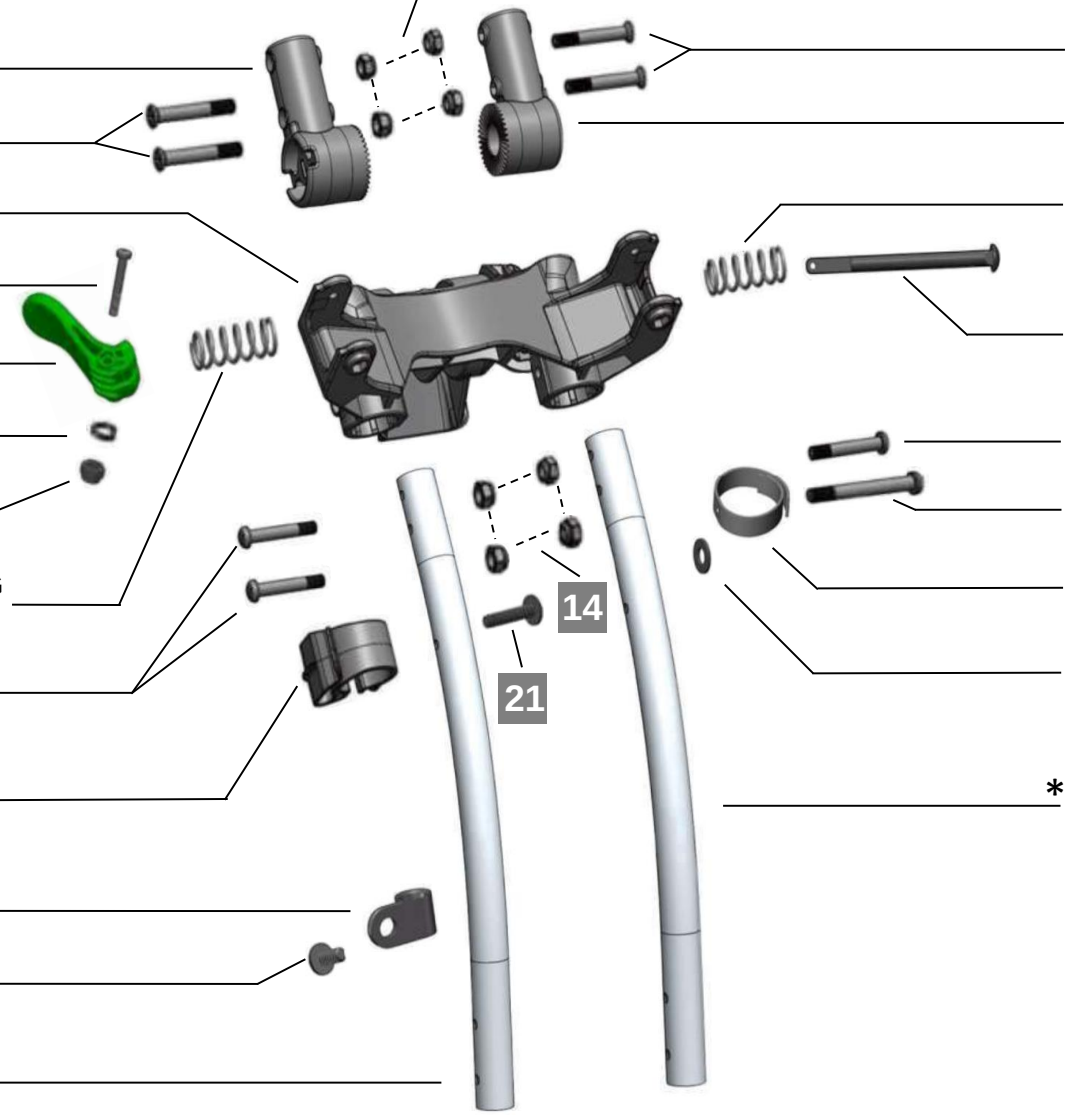

1 **HANDLE PIVOT(RIGHT)**
P1C - 52H - UBPAFG

2 **M5X34 CSK BOLT**
06 - M35 - M5X34KM

3 **BAG SADDLE UPPER**
P1S - 25BL - UBPAFG

4 **M4X26 BOLT**
BS1 - 22X - UBM426

5 **HANDLE LOCK LEVER**
P1C - 18R - UBPAFG

6 **M4 LOCK WASHER**
06 - M54 - M4LWS

7 **M4 NYLOCK NUT**
B1C - 37X - XXM4XX

8 **HANDLE HOLDER SPRING**
M1C - 10H - UB14XX

9 **M6X37 BOLT**
06 - M26 - M6X37PM

10 **STRAP CLIP**
P1S - 24BL - XXPPXX

11 **PLASTIC CLIP**
P1S - 07BL - HCPA66

12 **ST4X10PT SCREW**
B1C - 29X - HCST04

* 13 **MID-TUBE RIGHT**
T1S - 02## - US25XX

14 **M6 NYLOCK NUT**
06 - M44 - M6X6NL

2

15 **HANDLE PIVOT(LEFT)**
P1C - 12H - UBPAFG

8

16 **HANDLE PIVOT SHAFT**
B1C - 51X - UB10XX

9

17 **M6X45 BOLT**
B1S - 12BL - XXM645

18 **UMBRELLA VELLO**
Z1D - 05X - HCXXXX

19 **FLAT MESON**
06 - M55 - M6WS

* 20 **MID-TUBE LEFT**
T1C - 02## - UB25XX

21 **ST4X18PT SCREW**
06 - M41 - ST4X18PT